MAGLEV DEMONSTRATION PROJECT
SITE LOCATION AND CONCEPTUAL DESIGN STUDY

FINAL REPORT

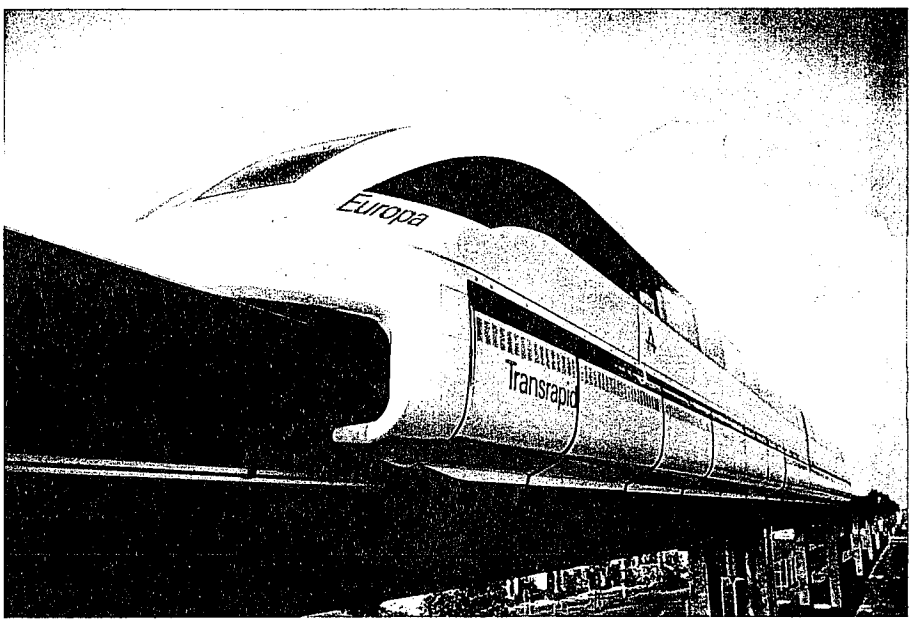

Prepared by:

BERGER, LEHMAN ASSOCIATES, P.C.
Rye, New York

December 1995

MAGLEV DEMONSTRATION PROJECT

SITE LOCATION AND CONCEPTUAL DESIGN STUDY

FINAL REPORT

DECEMBER 1995

BERGER, LEHMAN ASSOCIATES, P.C.

TABLE OF CONTENTS

LIST OF TABLES

LIST OF FIGURES

1.0 EXECUTIVE SUMMARY

1.1 Introduction

Berger, Lehman Associates, P.C. (BLA) and its sub-consultant Transrapid International (TRI) were retained by the New York State Thruway Authority (NYSTA) to conduct a Maglev Demonstration Project Site Location and Conceptual Design Study. The goal of this study was to identify four 50-mile long corridors along the Thruway which might be suitable for the development of a maglev demonstration facility and to develop the conceptual design of a maglev guideway in one of these corridors. The study area encompassed the Thruway mainline (I-87/90), the New England Section (I-95) to the Connecticut State Line and the Berkshire Section (I-90) to the Massachusetts State Line. This report describes the site selection and conceptual design process as well as the preparation of speed and cost estimates. It also describes several tasks which were later deleted from the conceptual design phase as a result of maglev policy changes at the Federal and State levels.

Three maglev systems were used in the site location phases of this study (Phases 1 through 3). These vehicle/guideway systems were the German Transrapid (TR07), the Japanese Linear Motor Car (MLU00X) and the U.S. Grumman (Configuration 002). They differ primarily in suspension technology (electromagnetic suspension vs. electrodynamic suspension), guideway magnets (superconducting vs. non-superconducting), guideway type (channel vs. T-type), and the ability of the passenger compartment to "tilt" when transversing horizontal curves (tilt vs. non-tilt). The Transrapid and Grumman vehicles were evaluated using tilt and non-tilt options. During the conceptual design phase of this project (Phase 4), generic design criteria were developed to reflect the requirements of a new Grumman maglev concept vehicle (Configuration 003) prepared under the National Maglev Initiative (NMI) System Concept Definition (SCD) Program.

1.2 Site Location Methodology/Alternative Sites

The study was conducted in four phases. During the first phase, a database of existing conditions in the study area was developed along with a set of maglev design criteria. The database included information on Thruway horizontal and vertical alignment, ROW widths and relevant land use and environmental data. The maglev design criteria covered guideway horizontal and vertical geometry including required superelevation and transitions. During the second phase a screening of the study area was conducted to eliminate Thruway sections less suitable for facility development due to restrictive horizontal curvature. The Thruway was sub-divided into four sections: New York City to Albany; Albany to Syracuse; Syracuse to Buffalo; and the Berkshire Section.

The Thruway sections which were retained for further consideration were evaluated to identify a preferred site in each of the four sections. The following sites were selected based on their ability to accommodate high speed maglev operations while minimizing adverse environmental impacts: Site 1 - Newburgh to Saugerties (Orange, Ulster and Greene Counties); Site 2 - Utica to Syracuse (Herkimer, Oneida, Madison and Onondaga Counties); Site 3 - Manchester to Rochester (Seneca, Ontario, Monroe and Genesee Counties); and Site 4 - The Berkshire Section (Albany, Rensselaer, and Columbia Counties).

1.3 Maglev Simulation

A maglev simulation model developed by Transrapid International was used to generate speed profiles for the four conceptual alignments developed during the site selection phase. The speed profiles reflected guideway geometry (i.e. grades, curves, superelevation), vehicle tilting capabilities, and selected passenger comfort criteria. Significant passenger comfort criteria were acceptable lateral acceleration and jerk (i.e. rate of change in acceleration). The criteria utilized were equivalent to those used by Amtrak in their Northeast Corridor service.

The simulation model was run in two modes: Type A simulation and Type B simulation. Type A simulation estimated a maglev's speed profile based on an operation designed to minimize energy consumption. This was accomplished by minimizing the number and magnitude of speed changes along a route. The result was a relatively constant speed profile. Type B simulation was designed to minimize total travel time. This was accomplished using a more dynamic speed profile which is closer to the local speed constraints imposed by the guideway alignment.

In general, Site 3 (Manchester to Rochester) offers the highest average speeds (220 mph-tilt, 180 mph-non-tilt) and highest maximum speeds (270 mph-tilt, 210 mph-non-tilt) assuming an energy efficient operational mode. Operating in a maximum speed mode, a speed of 300 mph may be achieved at this site. Site 4 (Berkshire Section) has the most speed restrictive geometry. A non-tilting maglev would have an average speed of 110 mph and a maximum speed of 130 mph on this alignment assuming energy efficient operations. A tilting maglev would have an operating speed of 140 mph and a maximum speed of 170 mph. A maximum speed of 200 mph could be achieved over a section less than 5 miles long assuming maximum speed operations. Sites 1 (Newburgh to Saugerties) and 2 (Utica to Syracuse) fall between Sites 1 and 4 in terms of average operating speed and maximum speed.

1.4 Cost Estimates

Construction cost estimates (1992 Dollars) were prepared for the four conceptual alignments developed during the site selection phase. They include guideway, vehicle, and a support facility cost estimates. The cost of a maglev support/maintenance facility including workshops, control and communications equipment, and general purpose maintenance vehicle was approximately $40 million. The required two-car maglev trainsets (two) would cost an additional $30 million. These costs are common to all alignment options. Guideway costs were estimated using both "high" and "low" guideway profiles. The "high" profile dual guideway was designed to cross over most existing Thruway overpasses. The "low" profile dual guideway was designed to reduce guideway construction costs by reducing average guideway column height. This would be accomplished by reconstructing some Thruway overpasses.

Generally a fifty mile long demonstration project with a dual guideway would cost approximately $1.3 billion while a 25 mile long project would cost approximately $740 million. It is important to note that these are approximate cost estimates prepared using small scale conceptual alignment plans, without detailed geotechnical or topographic data. Within the limitations of this study there is no appreciable cost difference between alternative sites. All costs are given in 1992 dollars.

Implementation costs could be reduced by initially erecting a single guideway on piers capable of supporting a future dual guideway. The second guideway could be added at a later date when required. The 50 mile long single guideway would then cost approximately $870 million while a 25 mile long guideway would cost approximately $500 million.

1.5 Guideway Conceptual Design

Site 1 between Newburgh and Saugerties was selected for conceptual design because it was common to all of the maglev alignment alternatives considered as potential routes between New York City and Albany. Two hundred scale topographic base mapping for this section was provided by NYSTA.

An environmental scan was performed along the east side of the Thruway within the corridor to identify constraints that would influence the design of the system. This constraints analysis was performed for wetlands and waterways, sensitive land uses, hazardous waste sites and overhead utilities.

Perrine's Bridge, a National Register Historic Site, is located approximately 22 miles from the southern project limit, and represents the most significant potential constraint to this project. It is located in close proximity to the Thruway and could potentially be impacted by the project, depending on the actual location of the maglev guideway. With the possible exception of Perrine's Bridge, it is not anticipated that environmental constraints would be fatal flaws to maglev guideway construction.

A revised set of conceptual design criteria were developed for this phase of the project in conjunction with NYSTA, NYSDOT and Raytheon. These criteria addressed maximum roll rate, maximum system banking, maximum lateral jerk rate, maximum unbalanced lateral acceleration, maximum vertical acceleration and minimum spirals. The conceptual design was drafted in Auto CADD and a revised speed profile was manually prepared (TRI's maglev simulation model was not used for this phase).

The acquisition of additional right-of-way (ROW) and air rights is proposed at several locations in order to accommodate required sinusoidal spiral transitions and maintain a minimum acceptable maglev speed of 185 mph. Specifically, ±25 acres of land is proposed for acquisition over the 50 mile guideway alignment. This property is spread over seven parcels, the largest of which is ±15 acres in size. Acquisition of ±1.5 miles of air rights is also proposed, spread over eight parcels.

1.6 Maglev Support Facility

The maglev support facility would include administrative offices, component workshops, computer and control facilities, electric power transmission equipment and transformers, a maintenance shop and storage area. An observation area is also recommended since the maglev has the potential to become a tourist attraction. The support facility should be located adjacent to the guideway, on a site with good roadway access and in the vicinity of existing power lines of appropriate capacity to reduce cost of power supply. It should also be located on a tangent section of the guideway or flat portion of spiral to facilitate functioning of switches and sidings. The guideway should be no higher than fifteen feet above the original ground at

the support facility site to provide easy access from mainline to sidings. It is estimated that a five acre site is required based on Transrapid's existing facility at Emsland and maglev lines proposed in other cities. Seven parcels, each at least five acres in size, were identified for the potential development of maglev support facilities.

1.7 Conclusions

Under the project's original Scope of Services, the refined conceptual maglev guideway alignment prepared during the fourth phase of the project was to be used for the preparation of refined estimates of construction costs, vehicle speeds and power requirements/energy use. A more detailed environmental review was also to be conducted including a discussion of maglev system/site-specific issues and a discussion of the potential "startle effect" based on previous studies.

However, as a result of policy changes at the State and Federal levels, it was determined that the current study should be terminated prior to the completion of these tasks. The cost estimates presented in this report are therefore based on the guideway alignment sketches and data collected during the first three phases of this study. The speed estimates for the refined alignment were developed based on a manual review of the alignment geometry without use of Transrapid's maglev simulation model.

Even with these limitations, it is clear that a maglev guideway and support facility could be constructed adjacent to the New York State Thruway between Newburgh and Saugerties with minimal environmental impact. With a limited program of ROW acquisition (± 25 acres), average speeds between 185 mph and 225 mph are projected for this 50 mile long corridor. Speeds up to 300 mph appear to be attainable over significant distances with the acquisition of additional ROW.

2.0 INTRODUCTION

2.1 Background

New York State's growth in population and economic power has been closely tied to its transportation systems. Each of the State's major economic centers grew as a result of its proximity initially to a port or waterway and later to the growing network of highways and airports. However, New York's economy and environmental quality are threatened by increasing levels of congestion on the State's highways and airports. This congestion, and the associated degradation of ambient air quality and increase in noise levels and energy consumption, can be expected to grow unless mitigation measures are implemented.

The New York State Thruway Authority (NYSTA), in its assessment of these problems, has identified an emerging technology which has the potential to improve transportation in the State and promote economic development. That technology is magnetic levitation (i.e. maglev). Maglev systems use magnetic forces for suspension, propulsion, and guidance.

2.2 Goals and Objectives

This study had four primary goals:

- Identify four 50 mile long sections of the New York State Thruway which are suitable for the development of a maglev test facility
- Estimate order-of-magnitude costs to construct a generic guideway and related facilities at each of the four alternative sites
- Develop a conceptual guideway alignment plan and profile, and conduct an environmental scan, for one of the four alternative sites
- Prepare revised speed profiles, updated cost estimates and site specific/technology specific environmental reviews for the conceptual guideway alignment

2.3 Study Area

The New York State Thruway, which extends 641 miles across New York State, is the longest toll highway in the United States. The Thruway's 426-mile mainline connects New York City and Buffalo, the State's two largest cities (Figure 2.1).

Thirty-seven of New York State's sixty-two cities, including the nine largest, are located along the Thruway corridor which contains seventy-five percent of the state's population. The Thruway system has direct connections with the Connecticut and Massachusetts Turnpikes, New Jersey's Garden State Parkway, I-90 in Pennsylvania and other major expressways serving the region.

The study area encompassed the New York State Thruway from New York City to Buffalo, the New England Section from New York City to the Connecticut State Line and the Berkshire Section from Albany to the Massachusetts State Line. It did not include the Erie Section, Niagara Section, I-84 or the Cross Westchester Expressway.

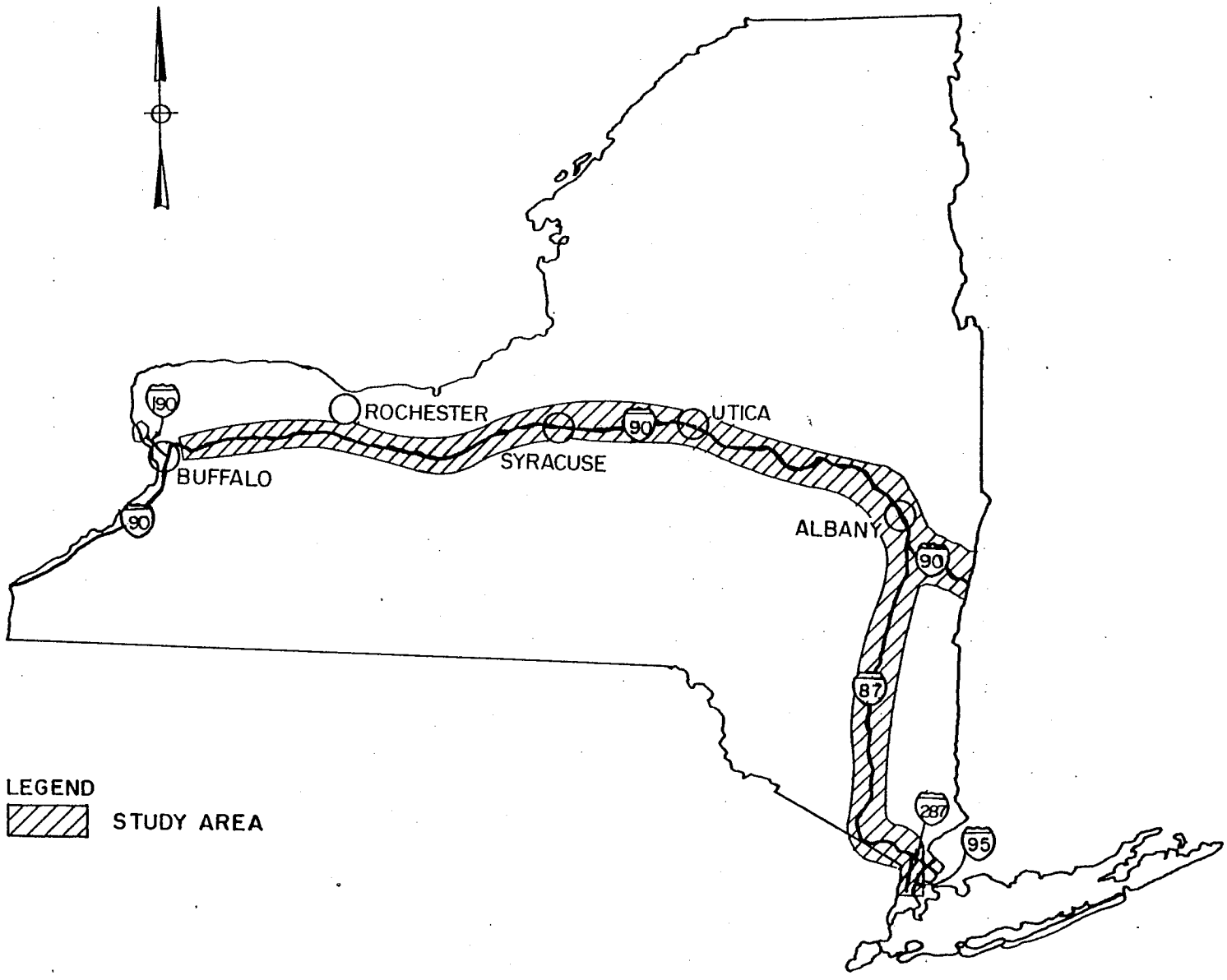

FIGURE 2.1
STUDY AREA

BERGER, LEHMAN ASSOCIATES, P.C.

The study area was divided into four corridors: New York City to Albany; Albany to Syracuse; Syracuse to Buffalo; and the Berkshire Section. A single site was selected within each of the four corridors.

2.4 Maglev Systems

Three maglev systems were evaluated during the site location phases (i.e., Phases 1-3) of this study: Transrapid 07 (TR07); Linear Motor Car (MLUOOX); and the Grumman (Configuration 002). These systems differ in technology and stages of development. A new Grumman prototype maglev (Configuration 003) was used for the conceptual design phase (i.e., Phase 4) of the project.

2.4.1 Transrapid

The most advanced maglev system, the Transrapid 07, is ready for commercial application, and a line between Berlin and Hamburg is currently being designed. The Transrapid utilizes electromagnetic suspension (EMS) and a linear synchronous motor (LSM). Its cab-end section is approximately 89 feet long, 12 feet wide and 13 feet high. Intermediate section areas will be approximately 81 feet long. Vehicle operating speeds range from 185 miles per hour to 310 miles per hour. A two section trainset will can carry between 80 and 160 passengers. A ten car trainset would have between 530 and 1060 seats.

2.4.2 Linear Motor Car

The Japanese Linear Motor Car (MLU00X) uses electrodynamic suspension (EDS). Superconductive coils cooled by liquid helium and arranged in the vehicle generate strong magnetic fields which induce an opposing magnetic field in the guideway coils. The vehicles are propelled by a long-stator linear motor (LSM). However, up to a speed of 60 mph the vehicles move on supporting wheels. The system is, therefore, not completely frictionless.

The MLU00X is currently in development. When it is completed, it will operate with a 91 foot long end car and 71 foot long intermediate car. A full length train (14 cars) will have seating for 950. The MLUOOX's maximum speed will be approximately 310 miles per hour. The Linear Motor Car operates in a channel shaped guideway.

2.4.3 Grumman Configuration 002/003

Configurations 002 and 003 are conceptual designs produced by Grumman Aerospace. There are no demonstrable prototypes. As originally conceived, Configuration 002 would employ superconducting magnets in repulsion (electrodynamic suspension-EDS) with traction power provided by a linear synchronous motor (LSM) located in the guideway. It would be similar to the Linear Motor Car. Configuration 002 was Grumman's concept vehicle during the site location phase of the study. It was later replaced by Configuration 003. Configuration 003, a system similar to Transrapid's but with superconducting magnets, was used during the conceptual design phase of the study.

Grumman's Configuration 002 would be approximately 98 feet long, 11 feet high and 11 feet wide. Its maximum speed would be approximately 300 miles per hour and it would have approximately 100 seats per car. Configuration 002 would operate in a channel shaped guideway. Configuration 003 would be similar in size to Configuration 002 and would operate on a "T" shaped guideway.

The most significant difference between the maglev systems proposed by Grumman Aerospace and the German and Japanese systems is the introduction of a passenger compartment tilting mechanism. The purpose of this mechanism is to overcome the 12 degree limit in guideway superelevation by allowing the maglev's passenger compartment to rotate (tilt) an additional 12 degrees. This would allow the Grumman maglev to travel through smaller radius curves at higher speeds than the Transrapid or Linear Motor Car. The length of the required spiral transitions would double for the Grumman vehicle.

2.5 Guideway Design Issues

In order to select sites appropriate for the development of a maglev demonstration project, it was necessary to generally define the configuration of the guideway structure. This configuration was used to identify Thruway sections capable of accommodating the guideway geometry and to estimate guideway construction costs.

2.5.1 At-Grade vs. Elevated Guideway

The guideway can be constructed either "at-grade" or on an elevated structure. None of the maglev alternatives truly operate "at-grade" because they utilize linear synchronous motors (LSM) for propulsion. With LSM, traction power is provided through magnets built into the guideway. The Transrapid's electromagnetic suspension (EMS) and the Linear Motor Car and Grumman's electrodynamic suspension (EDS) also require arrays of suspension and guidance magnets which are located on the guideway structure.

While maglev can accommodate grades up to 10%±, passenger comfort criteria and the required lengths of vertical curves make it desirable to provide vertical alignment which minimizes the number and magnitude of grades and grade changes. This is best accomplished by varying the column heights along the guideway to compensate for the varying Thruway grades.

Areas were identified where guideway costs could be reduced by lowering the guideway and reconstructing existing Thruway overpasses. A discussion of this alternative is included in Section 6.0 Cost Estimates. Figures 2.2 and 2.3 depict the maglev guideway on elevated and "at-grade" structures.

2.5.2 Single vs. Dual Guideway

A maglev demonstration facility can be constructed as a dual guideway with turnouts or as a single guideway with passing sidings. Since it is the intention of the Thruway Authority to ultimately incorporate the demonstration guideway in an intercity system for commercial operations, the guideway was conceptualized as a dual system.

2.5.3 Horizontal Alignment

Lateral acceleration results from the centrifugal force applied to a passenger as a vehicle travels on a horizontally curved section of guideway. Centrifugal force and lateral acceleration increase as speed increases or as horizontal curve radius decreases. For the purposes of this study, unbalanced lateral acceleration was limited to a force of 0.1g where g is equal to the force of gravity. This level of unbalanced lateral acceleration is equivalent to that experienced on Amtrak's Northeast Corridor. The following methods may be employed to compensate for (i.e., balance) lateral acceleration and achieve higher speeds on curves:

Superelevation - Superelevating (banking) the guideway on curves is one way to compensate for centrifugal forces. However, the amount that a guideway may be superelevated is limited by the need to allow emergency stops and evacuation on curves under adverse weather conditions. For safety reasons, guideway superelevation is limited to 12 degrees.

Vehicle Tilting - Tilting the maglev's passenger compartment can further offset the centrifugal forces acting on passengers. A maximum vehicle tilt of 12 degrees was employed in this study based on Grumman's maglev conceptual design.

Skewed Thruway Crossing - Another way to overcome speed restrictions imposed by the Thruway curves and limited ROW is to utilize a maglev alignment which crisscrosses the Thruway. This "solution" introduces additional problems including more difficult and costly guideway construction and additional traffic disruptions during both construction and operations. For these reasons, crisscrossing the Thruway was considered only for the Berkshire Section where severe alignment constraints were mitigated by crossing from the right side into the wide median.

Additional Right-of-Way - Restrictive guideway curvature may also be mitigated through the acquisition of property along the Thruway. This strategy may be considered in rural areas where the property adjacent to the Thruway is undeveloped and relatively inexpensive.

2.6 Support Facilities

A maglev demonstration project requires a variety of support facilities. These include administrative offices, component workshops, computer and control facilities, electric power transmission equipment and transformers, a maintenance shop and storage area. These facilities would be housed in one or more buildings depending on site characteristics. It is anticipated that property would be acquired along the Thruway for the development of a support facility.

It is anticipated that two two-car trainsets would initially be purchased. This would allow the operator to perform tests or conduct demonstrations with one train while the other was being modified, inspected or maintained. It would also allow tests of trains passing on a dual guideway. Recognizing the Authority's ultimate goal of providing commercial service, it is proposed that a moderately sized support facility be constructed initially with provision for future expansion.

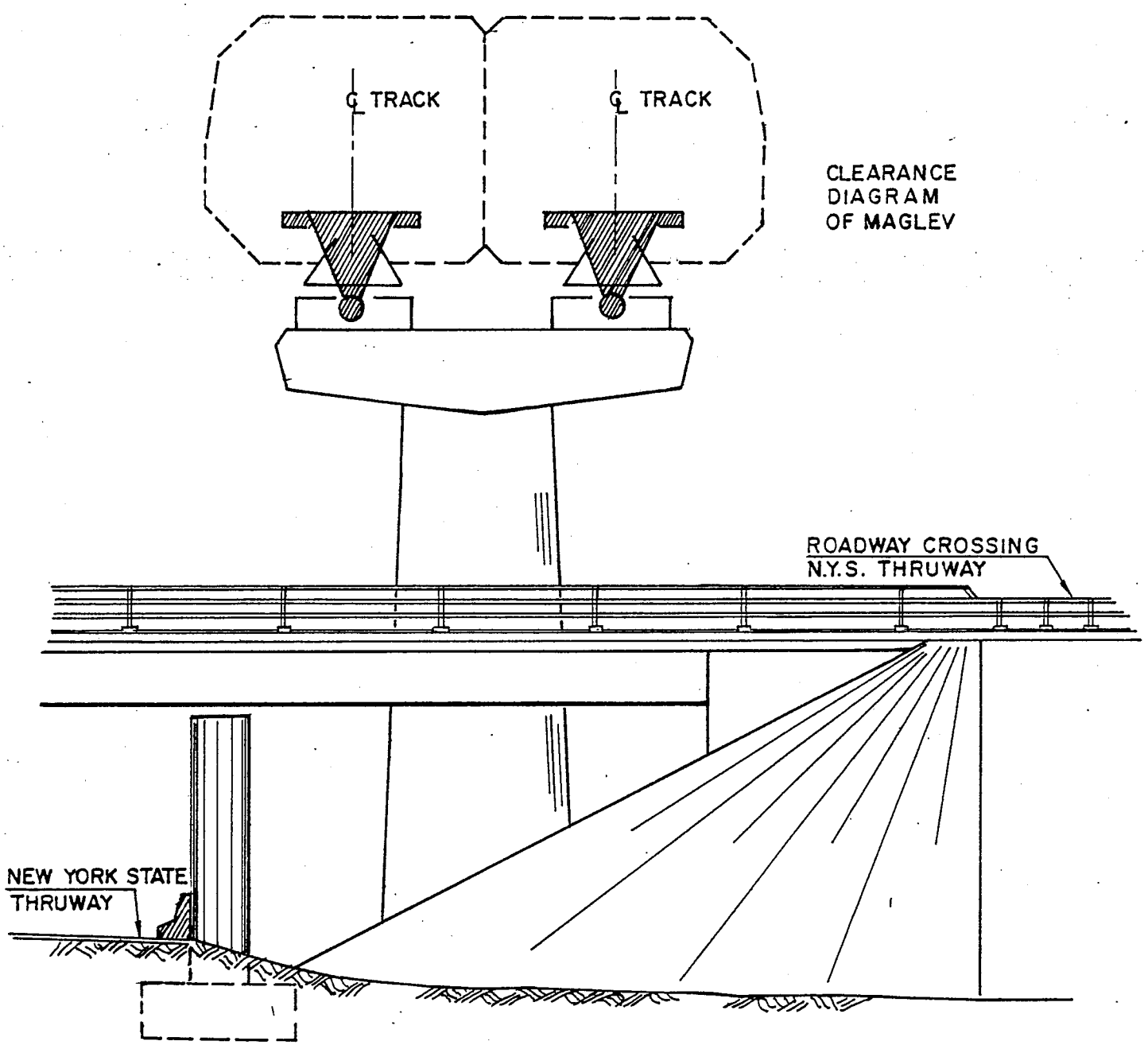

TYPICAL THRUWAY SECTION
WITH ELEVATED GUIDEWAY

FIGURE 2.2

BERGER, LEHMAN ASSOCIATES, P.C.

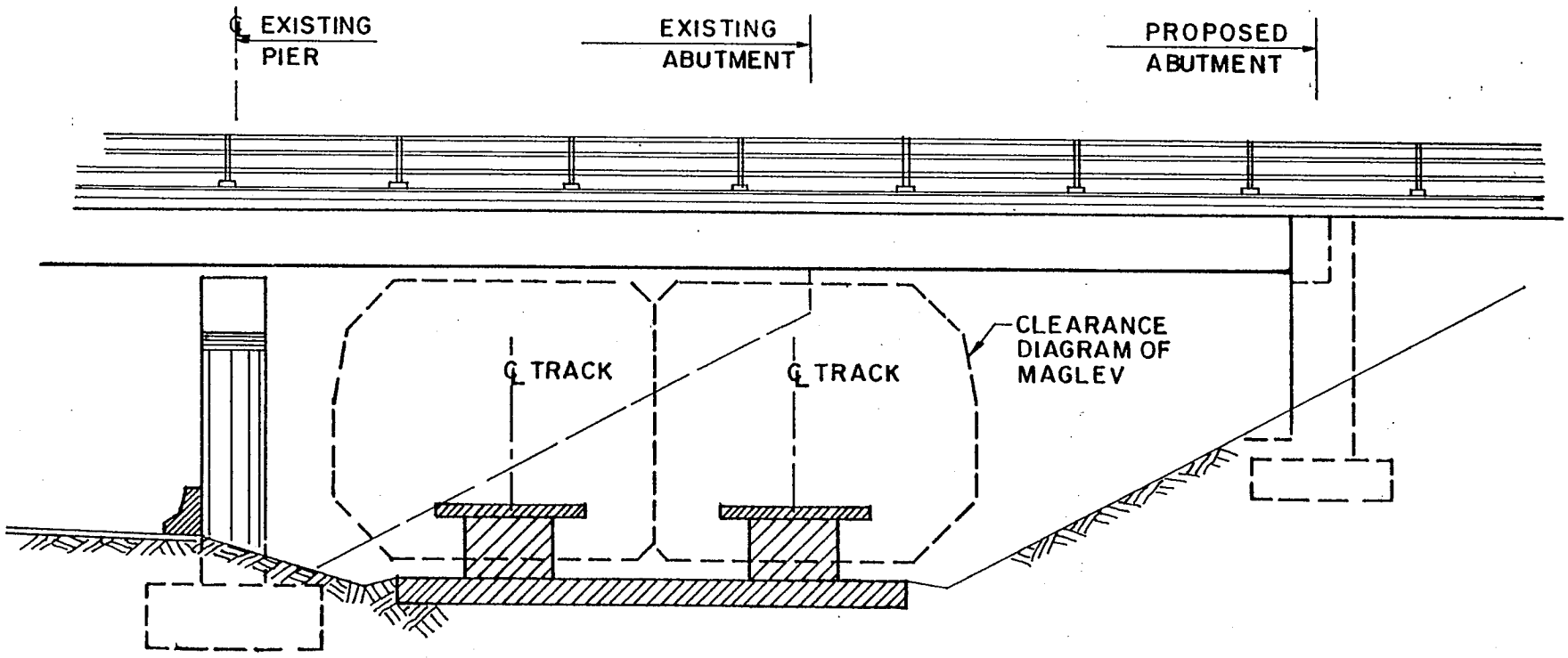

TYPICAL THRUWAY SECTION
WITH "AT-GRADE" GUIDEWAY

FIGURE 2.3

BERGER, LEHMAN ASSOCIATES, P.C.

The maintenance facility should provide approximately 10,000 square feet of space for workshops (e.g. pneumatic/hydraulic shops, air-conditioning/ventilation shops, electric shops, interior equipment) and another 10,000 square feet for storage. The garage, cleaning, maintenance and vehicle storage area should contain three guideways: two 200 foot long guideways for maglev storage and one 100 foot long guideway for special purpose vehicles. These vehicles are rubber tired and diesel powered. They are used to inspect and maintain the guideway, tow the maglev vehicle, and remove snow from the guideway. These facilities will require approximately 30,000 square feet.

A three-way switch would be required to access the three guideways within the 50,000 square foot maintenance building. This switch, approximately 375 feet long and 80 feet wide, would require approximately 30,000 square feet of space outside the maintenance building.

The basic storage and maintenance building requires a minimum of 80,000 square feet (1.8 acres). Additional space outside is necessary to accommodate the three-way switch (30,000 square feet) and for access roads, parking, landscaping and power equipment. Depending on the shape of the parcel, approximately three to four acres is required for an adequate storage and maintenance facility. It is recommended that a five acre site be identified to provide space for future expansion.

3.0 SITE LOCATION METHODOLOGY

The site location study was conducted in three phases. During the first phase, a database of existing conditions in the study area was developed along with a set of maglev design criteria. The database includes information on Thruway horizontal and vertical alignment, ROW widths and relevant land use and environmental data. The maglev design criteria covers guideway horizontal and vertical geometry including required superelevation and transitions.

During the second phase a screening of the study area was conducted to eliminate Thruway sections less suitable for facility development due to restrictive horizontal curvature or the presence of constraints which might cause severe financial or engineering complications. Approximately half of the Thruway was eliminated from consideration based on this review. During this phase the Thruway was disaggregated into four corridors: New York City to Albany, Albany to Syracuse, Syracuse to Buffalo and the Berkshire Section.

The remaining Thruway sections were examined in greater detail to identify one preferred site in each of the four corridors. Sites were selected based on their ability to accommodate maglev operations while minimizing adverse environmental impacts.

3.1 Phase 1A - Existing Conditions

Topographic and planimetric data were collected for the study area and summarized in matrix form for ten mile sections of the Thruway. The data included:

- Number and Location of Interchanges and Toll Barriers
- Number and Location of Overpasses and Underpasses
- Approximate Thruway Right-of-Way Widths
- River Crossings
- Sensitive Land Uses Including Wetlands
- State of New York Surficial Geology Maps
- Powerline Crossings and Power Facilities
- Developed Areas
- Rock Formations
- Service and Parking Areas
- Thruway Geometric Data
- Intermodal Facilities

3.2 Phase 1B - Maglev Design Criteria

3.2.1 Introduction

The maximum speed attainable on a maglev system is constrained by several inter-related factors including passenger comfort criteria, design speed, propulsion force, guideway parameters, and operational plan. These are summarized in the following sections.

3.2.2 Rider Comfort Criteria

During a trip along the guideway, a maglev vehicle and its passengers would experience accelerations varying in direction and intensity. These would result from variations in speed (e.g. acceleration, deceleration), curvature of the guideway (e.g. centrifugal and vertical acceleration), and relative movement of a passenger in a vehicle travelling along a curve (i.e. coriolis acceleration). In addition, a passenger would experience variations in accelerations (i.e. jerks) which affect rider comfort.

Rider comfort criteria were developed to address unbalanced lateral acceleration and jerk (i.e. rate of change in acceleration). Unbalanced lateral acceleration was limited to a force of 0.1g where g is equal to the force of gravity. This is equivalent to the unbalanced acceleration permitted on Amtrak's Northeast Corridor. Jerk was limited to 0.15g per second. Coriolis acceleration (i.e. relative movement of a passenger in a vehicle travelling along a curve) was not considered in the site selection process.

3.2.3 Guideway and Vehicle Parameters

Guideway and vehicle parameters include minimum curve radius, maximum superelevation, maximum vehicle tilt, and maximum acceptable vehicle torsion. The physical relationship between the guideway horizontal radius, superelevation, acceptable lateral acceleration and maximum speed was defined and used to estimate the maximum speed achievable on alternate sections of the Thruway.

With superelevation and vehicle tilt limited to 12° each and acceptable unbalanced lateral acceleration limited to 0.1g, the maximum speed achievable on a given section of Thruway was a function of the maximum radius achievable. For the high speed design of a maglev system, a sinusoidal superelevation transition curve is recommended. The minimum length of the transition curve was defined by the jerk criterion in conjunction with the maximum acceptable torsion of the vehicle.

3.2.4 Operational Concept

There are three primary operational concepts: commercial operation; special operation; and experimental operation. Commercial service refers to the provision of regular transportation service open to the public. Special operations refers to more limited operations serving specific markets or events. Experimental service is limited to the testing of maglev systems and components. The maglev site selection and operations simulation is based on the assumption that the demonstration facility will ultimately be incorporated into a commercial operation.

3.3 Phase 2 - Screening

The goal of this study was to identify four alternative sites along the Thruway where a maglev demonstration project could be constructed and operated. The sites are located in each of four corridors: New York City to Albany, Albany to Syracuse, Syracuse to Buffalo and the Berkshire Section.

The preliminary screening process employed curve and spiral design criteria, shown in Table 3.1, for 300 mph, 250 mph and 200 mph maglev operations using tilting and non-tilting vehicles. These criteria are based on a maximum superelevation of 12° (i.e. 2.5 inches per foot), a maximum vehicle tilt of 12°, unbalanced lateral acceleration on curves limited to 0.10g (i.e. 3.2 ft/sec^2), lateral jerk limited to 4.8 feet per second^3, and a maximum acceptable guideway torsion of 0.024 degrees per foot.

TABLE 3.1

MAGLEV SCREENING CRITERIA

Design Criteria	Non-Tilting Maglev			Tilting Maglev		
	300 mph	250 mph	200 mph	300 mph	250 mph	200 mph
Minimum Curve Radius	19,000 feet	13,300 feet	8,500 feet	10,900 feet	7,600 feet	4,800 feet
Minimum Spiral Length	1,000 feet	1,000 feet	1,000 feet	2,000 feet	2,000 feet	2,000 feet

Source: Berger, Lehman Associates, P.C.

Templates reflecting these alignment criteria and a 35 foot wide dual guideway were prepared using acetate sheets. These were then used to screen the 500 scale aerial photographs montaged into 2.8± mile long strips. These strips were reviewed to determine whether they could accommodate maglev operations at 300 mph, 250 mph, and 200 mph by tilt and non-tilt vehicles on the most restrictive curves.

Thruway sections 50 miles long were then developed by aggregating contiguous aerial strips. Strips in each corridor which could accommodate higher average speeds were retained while strips with severe speed restrictions were deleted. Based on this screening roughly half of the Thruway was selected for further assessment.

3.4 Phase 3 - Assessment

Thruway sections which survived the preliminary screening were evaluated in terms of environmental and land use characteristics, potential intermodal connections, availability of power, and impediments to construction (e.g. major river crossings, major rock formations, steep grades, toll barriers, interchanges).

The result of this study phase was the selection of four alternative sites, one in each corridor, which could accommodate maglev while avoiding most environmentally sensitive areas. In general, areas with difficult terrain (e.g. rock formations, rivers) were avoided. Intermodal opportunities were identified where feasible The four alternative sites are shown in Figure 3.1 and described in Section 4.0.

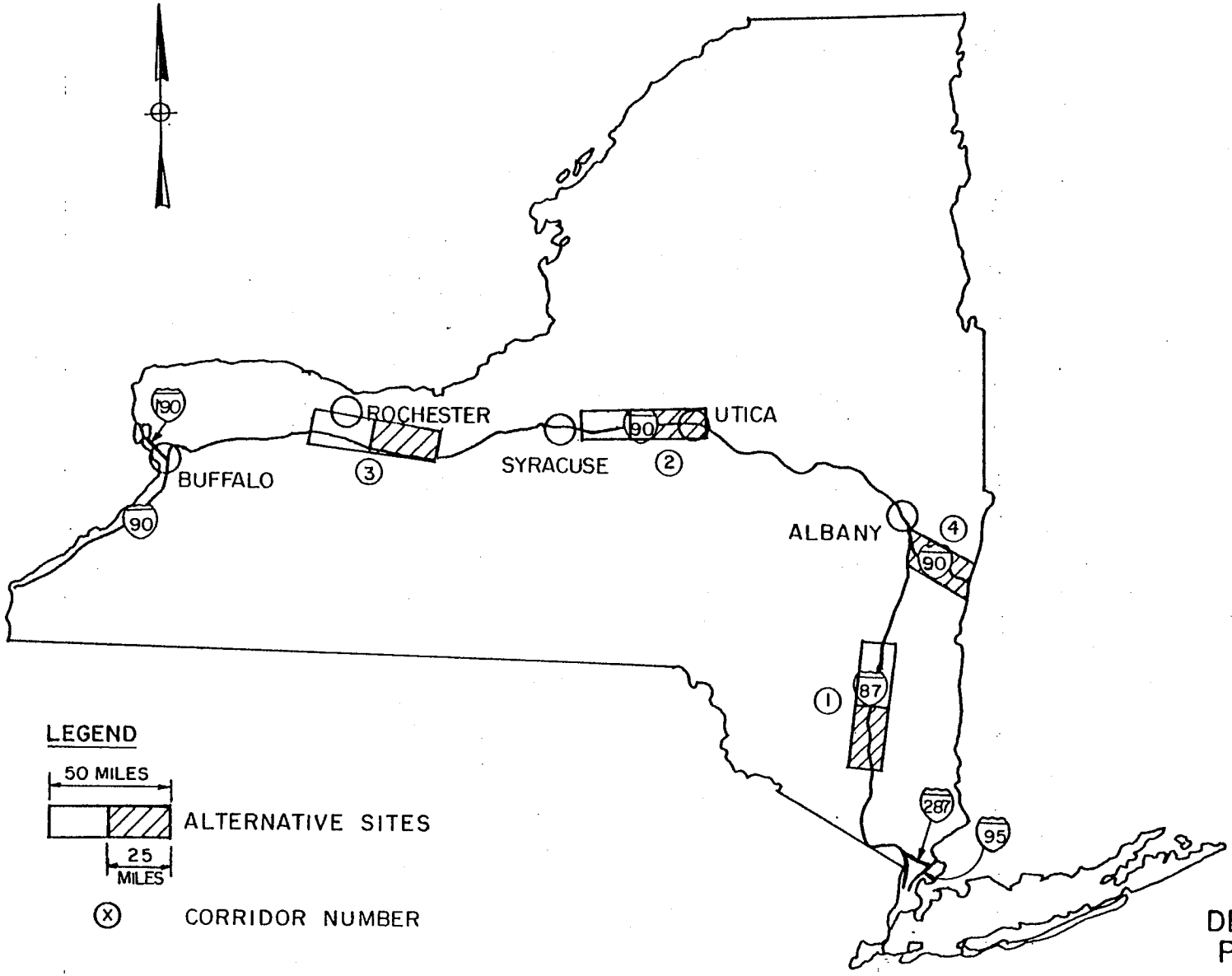

FIGURE 3.1
ALTERNATIVE DEMONSTRATION PROJECT SITES

BERGER, LEHMAN ASSOCIATES, P.C.

4.0 ALTERNATIVE SITES

4.1 Site 1 - Newburgh to Saugerties

Site 1 (Newburgh to Saugerties) is located in the New York City to Albany Corridor (Milepost 56.8 to Milepost 106.8). It is located in Orange, Ulster and Greene Counties. Existing interchanges are located in Newburgh, New Paltz, Kingston and Saugerties. The Thruway in this area has between 125 feet and 225 feet of Right-of-Way on both the east and west sides of the centerline. There are 10± curves greater than 1° (i.e. radius less than 5,730 feet) in this section. Two northbound and southbound service areas and northbound and southbound parking areas are located in the corridor. The Thruway crosses Modna Creek, the Wallkill River, Rondout Creek, Coopus Creek, Sawkill River and Plattekill River.

4.2 Site 2 - Utica to Syracuse

Site 2 (Utica to Syracuse) is located in the Albany to Syracuse Corridor (Milepost 227.0 to Milepost 277.0). It is located in Herkimer, Oneida, Madison and Onondaga Counties. Interchanges are located at Utica, Westmoreland, Verona, Canostota, and Syracuse/Collamer. The Thruway in this area has between 100 and 250 feet of Right-of-Way on both the north and south sides of the centerline. There are fewer than 5 curves greater than 1° (i.e., radius less than 5,730 feet) in this section. One eastbound and two westbound service areas, and one eastbound and one westbound parking area are located in the corridor. The Thruway crosses the Barge Canal, Mohawk River, Oreskany Creek, Oneida Creek, Chittenango Creek, Limestone Creek and Butternut Creek.

4.3 Site 3 - Manchester to Rochester

Site 3 (Manchester to Rochester) is located in the Syracuse to Buffalo Corridor (Milepost 328.0 to Milepost 378.0). It is located in Seneca, Ontario, Monroe and Genesee Counties. Interchanges are located in Manchester, Canandaigua, Rochester/Victor, and Rochester/ Henrietta. The Thruway in this area has between 100 and 250 feet of Right-of-Way on both the north and south sides of the centerline/median. There is only one curve greater than 1° (i.e. radius less than 5,730 feet)in this section. Two eastbound and westbound service areas and one eastbound parking area are located in the corridor. The Thruway crosses the Ganargua Creek and the Genesee River.

4.4 Site 4 - Berkshire Section

Site 4 is located on the Berkshire Section of the Thruway bounded by the Hudson River on the west and the Massachusetts State Line on the east. This section of Thruway is located in Albany, Rensselaer and Columbia Counties. Interchanges are located at Route 9, the Taconic State Parkway and Route 22.

The Berkshire Section has between 160 and 450 feet of Right-of-Way on both the north and south sides of the centerline. There are over 15 curves greater than 1° (i.e. radius less than 5,730 feet) in this section, including 5 curves over 2° (i.e. radius less than 2,865 feet).

The Canaan Toll Barrier is located in this section. Abandoned service areas are adjacent to the eastbound and westbound lanes. There are no parking areas. The Thruway crosses the Shodack Creek and Kinderhook Creek in this section. There is a Hudson River crossing on the Berkshire Section just west of the site boundary.

5.0 MAGLEV SIMULATION

5.1 Introduction

The model used to simulate maglev operations at the four alternative sites is based on a system of differential equations which describe the relationships between vehicle motion, resistance and thrust, and between voltage and current. It was previously developed by Transrapid International to evaluate alternative alignments.

The model was used to determine the operating characteristics of the three maglev systems (Grumman, Transrapid, Linear Motor Car), two of which had tilt and non-tilt options (Grumman and Transrapid). The simulation model was run in two modes: Type A simulation and Type B simulation. Type A simulation estimated a maglev's speed profile based on an operation designed to minimize energy consumption. This was accomplished by minimizing the number and magnitude of speed changes along a route. The result was a relatively constant speed profile. Type B simulation was based on minimizing total travel time. This was accomplished using a more dynamic speed profile which was closer to the local speed constraints imposed by the alignment.

In order to simplify the analysis, operations of the five maglev options were simulated for the 50 mile long alignment in the New York City to Albany corridor using both Type A and Type B operating scenarios. The remaining alignments were modelled for both tilt and non-tilt Transrapid Type A operations. This reduced the number of simulations while producing reasonable conclusions for the potential maglev-alignment combinations. Tables 5.1 and 5.2 summarize the results of this evaluation.

5.2 Site 1 - Newburgh to Saugerties

The average speed for non-tilting maglev operations was 140 mph while the maximum speed was 160 mph. The average speed for tilting maglev vehicles was 170 mph with a maximum speed of 210 mph. These speeds assume energy efficient operations. When the same 50 mile alignment was simulated assuming maximum speed operations, a maximum speed of 260 mph was achieved over a 10 mile section for tilt maglev operations.

5.3 Site 2 - Utica and Syracuse

The average speed for non-tilting maglev operations was 150 mph while the maximum speed was 180 mph. The average speed for tilting maglev vehicles was 190 mph with a maximum speed of 240 mph. These speeds assume energy efficient operations. When the same 50 mile alignment was simulated assuming maximum speed operations, a maximum speed of 270 mph was achieved over a five mile section for tilt maglev operations.

TABLE 5.1

SIMULATION SUMMARY
ALTERNATIVE CORRIDORS

SPEEDS IN MILES PER HOUR
TYPE A - ENERGY EFFICIENT OPERATION

Site	Limits	Non - Tilt Transrapid		Tilt Transrapid	
		Maximum	Average	Maximum	Average
1	Newburgh to Saugerties	160	140	210	170
2	Utica to Syracuse	180	150	240	190
3	Manchester to Rochester	210	180	270	220
4	Berkshire Section	130	110	170	140

Source: Berger, Lehman Associates, P.C.

TABLE 5.2

SIMULATION SUMMARY
NEWBURGH TO SAUGERTIES

SPEEDS IN MILES PER HOUR

Maglev System	Tilt Option	Type A Simulation		Type B Simulation	
		Maximum	Average	Maximum	Average
Grumman	Tilt	220	180	260	200
	Non-Tilt	160	140	220	180
Transrapid	Tilt	210	170	260	180
	Non-Tilt	160	140	220	160
Linear Motor Car	Tilt	N.A.	N.A.	N.A.	N.A.
	Non-Tilt	160	140	220	160

Source: Berger, Lehman Associates, P.C.

5.4 Site 3 - Manchester to Rochester

The average speed for non-tilting maglev operations was 180 mph while the maximum speed was 210 mph. The average speed for tilting maglev vehicles was 220 mph with a maximum speed of 270 mph. These speeds assume energy efficient operations. When the same 50 mile alignment was simulated assuming maximum speed operations, a maximum speed of 300 mph was achieved over a distance of 20 miles for tilt maglev operations.

5.5 Site 4 - Berkshire Section

The average speed for non-tilting maglev operations was 110 mph while the maximum speed was 130 mph. The average speed for tilting maglev operations was 140 mph with a maximum speed of 170 mph. These speeds assume energy efficient operations. When the same 23 mile long alignment was simulated assuming maximum speed operations, a maximum speed of 230 mph was achieved for a distance under 5 miles.

5.6 Alternative Maglev Systems

Operations by the five maglev system/tilt alternatives were simulated for the Newburgh to Saugerties (Site 1) 50 mile alignment for comparative purposes. Both Type A (energy efficient) and Type B (maximum speed) simulations were prepared.

Under Type A (energy efficient) operating assumptions, the highest average speeds were achieved by the two tilt alternatives. The average Transrapid tilt speed was 170 mph while the Grumman tilt speed was 180 mph. Their maximum speeds were 210 mph and 220 mph, respectively. The non-tilt average speeds were 140 mph for all systems. Their maximum speeds were 160 mph.

Under Type B (maximum speed) operating assumptions, the highest average speeds were achieved by the two tilt alternatives. The average Transrapid tilt speed was 180 mph while the Grumman tilt speed was 200 mph. Their maximum speeds were both 260 mph. The non-tilt average speeds were 160 mph for the Transrapid and MLUOOX and 180 mph for the Grumman 002 vehicles. The Transrapid maximum speed was 220 mph for all alternatives.

6.0 COST ESTIMATES

6.1 Introduction

Construction cost estimates (1992 Dollars) were developed for the four sites. These estimates included guideway, vehicle and support facility costs. A single support facility cost estimate was developed since the components of this facility did not vary by site. However, support facility and guideway costs may vary somewhat by site based on differences in topography, geotechnical conditions etc. These factors are beyond the scope of this study. A description of additional facilities required to accommodate alternative maglev systems is included.

Guideway cost estimates were developed using 1 inch=500 feet scale alignment plans and profiles without the benefit of detailed geotechnical or topographic data. The guideway cost estimate is intended only to convey approximate costs for alternative sites. A generic dual guideway was studied for each site. Thus, the guideway cost difference between the four sites, within the scope of this study, results from differences in average column heights. The development of guideway and support facility costs is discussed in the following sections.

6.2 Guideway Costs

Cost estimates were developed for the construction of an elevated dual guideway at four sites with seven alternative (25 mile/50 mile) alignments. Costs were developed based on Transrapid unit cost data from projects in Florida, Pennsylvania, California and Nevada modified to reflect New York prices and conditions.

"High" and "low" profile guideway alternatives were developed for two sites (Newburgh to Saugerties, and Utica to Syracuse). The purpose of the "low" profile guideway was to reduce construction costs by lowering average guideway column height. This would require the reconstruction of highway overpasses in order to accommodate the "low" maglev guideway. A discussion of cost implications of constructing a guideway on low piers and reconstructing Thruway overpasses is included.

In order to estimate guideway construction cost, a cost per mile nomograph was developed based on the estimated costs of guideways with 15, 30, 45 and 60 foot column heights. (See Figure 6.1) The costs include steel girders, long stators, bearings, columns, and foundations. They are based on 90 foot span lengths and load data provided by Transrapid. They do not include the additional horizontal forces developed by tilt vehicles.

Average column heights were determined for one mile sections of guideway based on the site selection phase (Phases 1-3) conceptual profiles for 25 and 50 mile long alternatives. Where highway overpass reconstruction was required an approximate reconstruction cost of $2 million per overpass was included. The cost of special structures to carry the guideway across the eastbound Thruway lanes on the Berkshire Section was estimated to be approximately three million dollars for an average 600 foot long structure. This special structure cost would be in addition to the guideway cost.

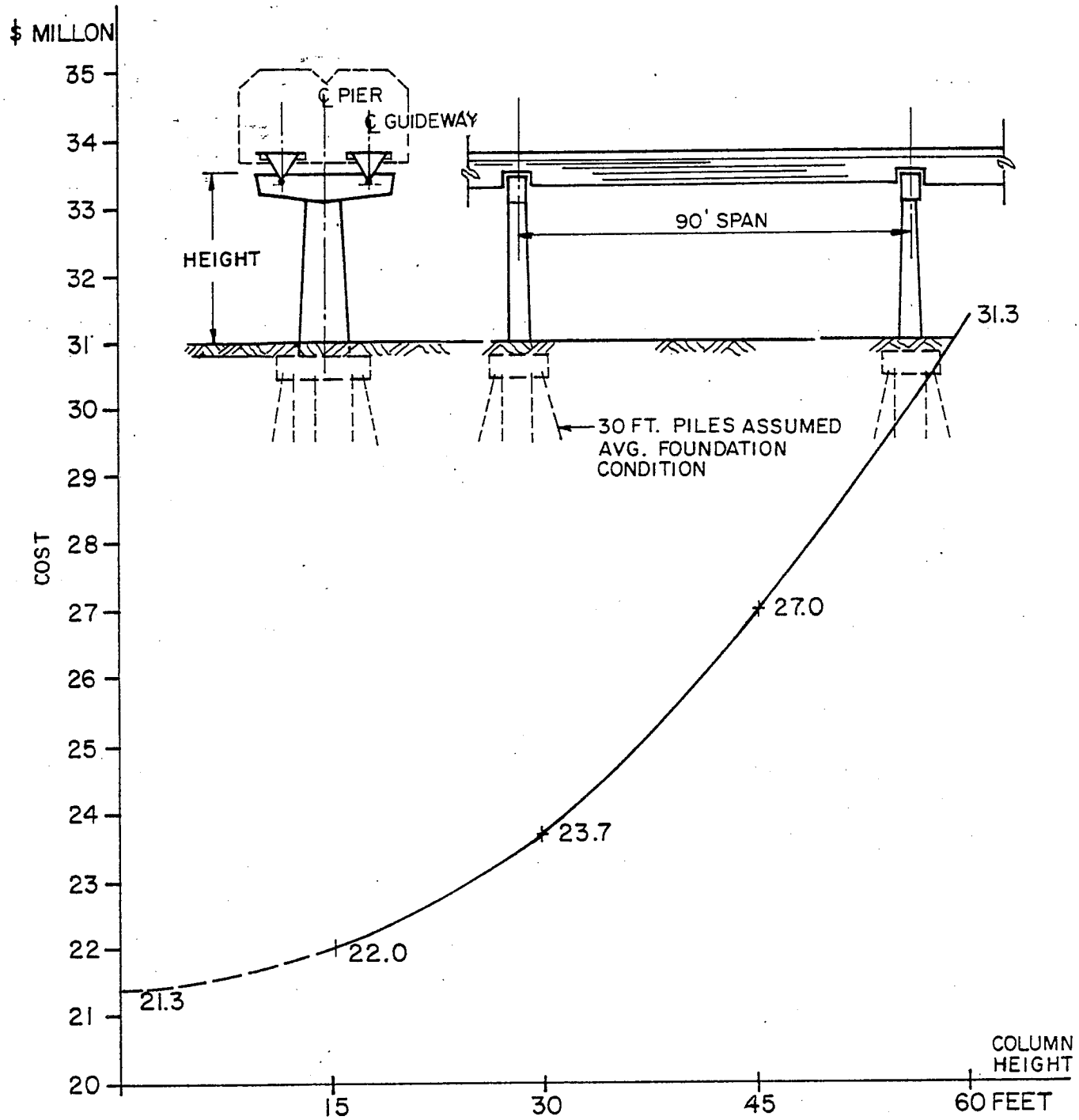

GUIDEWAY COST PER MILE

FIGURE 6.1

BERGER, LEHMAN ASSOCIATES, P. C.

6.3 Vehicle Costs

For the purposes of this analysis it was assumed that two, two-car trains would be purchased initially. This would allow the operator to perform tests or conduct demonstrations with one train while the other is being modified, inspected or maintained. In addition, it would allow the operator to test the effects of two trains passing and operating on the dual guideway. The cost of two two-car trains was estimated to be $30 million. Tilt vehicles would cost between 15 and 20 percent more than non-tilt cars because of the sensing and actuation requirements.

A rubber tired, diesel powered special purpose vehicle capable of travelling on the maglev guideway is also proposed for inspection and maintenance of the guideway and for towing the maglev if required. This vehicle could also be used for snow removal. Its cost would be approximately $8 million.

6.4 Support Facility Costs

As described in Section 2.6, the maglev demonstration project has a variety of support facility requirements. These include administrative offices, component workshops, computer and control facilities, electric power transmission equipment and transformers, a maintenance shop and storage area. These facilities would be housed in one or more buildings depending on site characteristics.

Based on the support facility cost estimate prepared for the Florida maglev project, it is projected that the proposed facility would cost approximately $26 million. A three way switch would be required to access the guideways in the maintenance building. This would cost approximately $2.5 million.

6.5 Maglev Systems

As noted previously, the purpose of this study is to identify four sites where a generic maglev facility could be constructed and operated. Site selection criteria were developed to reflect the design requirements and operating characteristics of both tilting and non-tilting maglevs. Simulations were prepared for the Transrapid, Linear Motor Car and Grumman vehicles using the conceptual site selection phase (Phases 1-3) alignments.

The cost estimates presented in the previous sections were based on Transrapid cost estimates prepared for projects in Florida, Pennsylvania, California and Nevada. There was no comparable data available for the Linear Motor Car and Grumman systems. The Transrapid data was revised to reflect New York prices and conditions, in 1992 dollars.

The Grumman 002 and Linear Motor car differ from the Transrapid in their use of superconducting magnets for suspension and propulsion. These magnets require 4.2 degree Kelvin refrigeration to maintain a superconducting mode. This refrigeration is provided on-board the vehicle. The three maglev systems also utilize different power conditioning and distribution equipment and switches.

The New York State Technical and Economic Maglev Evaluation prepared for the New York State Energy Research and Development Authority (NYSERDA) in June 1991 presented a preliminary

maglev cost comparison by subsystem. According to their estimates, power conditioning equipment costs were approximately 5% higher for Configuration 002 and the Linear Motor Car when compared to Transrapid while power distribution costs are the same. Configuration 002 and Linear Motor Car switches are approximately half the cost of Transrapid's. Signal and communications equipment would be similar in cost for all three systems. The NYSERDA report states that guideway structure costs would be less for the Grumman 002 and Linear Motor Car than for Transrapid.

6.6 Summary

The construction cost of a maglev support and maintenance facility including workshops, control and communications equipment, and general purpose maintenance vehicles would be approximately $40 million. The two two-car maglev trainsets would cost an additional $30 million. These costs are common to all the alternative alignments.

Guideway costs were estimated for both "high" and "low" dual guideway profiles. The "high" profile dual guideway was designed to cross over most existing Thruway overpasses while the "low" profile dual guideway was designed to reduce construction costs by reducing average guideway column heights. This was accomplished by reconstructing Thruway overpasses to allow the maglev guideway to pass below. The cost of Thruway overpass modification, approximately $2 million per overpass, was offset by guideway cost savings.

Generally a 50 mile long demonstration project with a dual guideway would cost approximately $1.3 billion while a 25 mile long demonstration project would cost approximately $740 million. Construction costs could be reduced by initially erecting a single guideway on piers capable of supporting a future dual guideway. The second guideway could then be added at a later date when required. A 50 mile long single guideway would cost approximately $870 million while a 25 mile long single guideway would cost approximately $500 million. Table 6.1 summarizes the results of this analysis. It is important to note that these are approximate cost estimates prepared using small scale alignment plans and profiles, without detailed geotechnical or topographic data.

TABLE 6.1

CONCEPTUAL COST ESTIMATES
(IN 1992 DOLLARS)

Component	25 Mile Alignment		50 Mile Alignment	
	Single Guideway	Dual Guideway	Single Guideway	Dual Guideway
Guideway	$430 million	$670 million	$800 million	$1,300 million
Vehicles	$30 million	$30 million	$30 million	$30 million
Support Facility	$40 million	$40 million	$40 million	$40 million
Total	$500 million	$740 million	$870 million	$1,370 million

Source: Berger, Lehman Associates, P.C.

7.0 GUIDEWAY CONCEPTUAL DESIGN

7.1 Environmental Setting

An environmental scan was performed during Phase 4 along the east side of the New York State Thruway for the fifty mile section between Newburgh and Saugerties to identify environmental constraints that will influence design of the system. The environmental constraints were identified so that they can be avoided where possible and practical in the subsequent development of the guideway alignment.

7.1.1 Wetlands and Waterways

The study area wetland types include forest, scrub-shrub, wet meadows, and emergent wetland and open waters such as rivers, streams, ponds and lakes. Some of these areas may provide habitat for state and/or federal threatened and endangered species as described below. Federally listed threatened and endangered plant and animal species regulated by USFWS were not identified within the study area as noted by the NYSDEC Natural Heritage Program.

Southern Project Limit (Newburgh) to Interchange 18 (New Paltz) - The southern project limit to Interchange 18 primarily contains emergent wetlands associated with ditches and stream channels. Secondary sources and field investigations also identified scrub-shrub, wet meadows, forested wetlands, and unnamed streams and ponds. The NWI maps indicate the presence of wetlands. The NYSFWM indicates the presence of eight New York State regulated wetlands.

The NYSDEC Natural Heritage Program has identified one species of special concern known to inhabit the vicinity of the project area. The Prairie Wedgegrass (*Sphenopholis obtusata var obtusata*) is a state unprotected plant species known to inhabit dry, open soils of woods and shaded edges, watersides and meadows within Ulster County, Town of New Paltz on the USGS Rosendale and Clintondale Quadrangles.

Interchange 18 (New Paltz) to Interchange 19 (Kingston) - The segment from Interchange 18 to Interchange 19 primarily contains emergent wetlands associated with ditches and stream channels. Secondary sources and field investigations also identified scrub-shrub and forested wetlands. This segment also includes several rivers and streams including Esopus Creek, Rondout Creek, Wallkill River, Spring Lake and unnamed streams, ponds and lakes. The NWI maps are available for only a portion of this segment. Those NWI maps available indicate the presence of wetlands. The NYSFWM indicates the presence of six New York State regulated wetlands within this segment.

The NYSDEC Natural Heritage Program has identified two species of special concern known to inhabit the vicinity of the project area. The Downy Lettuce (*Lactuca hirsuta*) is a rare plant species known to inhabit dry, sandy, open ground of woods, shaded edges and roadsides within Ulster County and the Towns of Ulster and Kingston on the USGS Kingston West Quadrangle.

The Prairie Wedgegrass (*Sphenopholis obtusata var obtusata*) is a rare plant species known to inhabit dry, open soils of woods and shaded edges, watersides and meadows within Ulster County, Town of New Paltz on the USGS Rosendale and Clintondale Quadrangle. This species may occur within the project area.

Interchange 19 (Kingston) to Interchange 20 (Saugerties) - The segment from Interchange 19 to Interchange 20 primarily contains emergent wetlands associated with ditches and stream channels. Secondary sources and field investigations also identified forested wetlands. This segment also includes rivers and streams including Esopus Creek, Sawkill Creek, Plattekill Creek, Mudder Kill, Tannery Brook and unnamed streams and ponds. The NYSFWM indicates the presence of two New York State regulated wetlands within this segment.

The NYSDEC Natural Heritage Program has identified two species of special concern known to inhabit the vicinity of the project area. The Downy Lettuce (*Lactuca hirsuta*) is a rare plant species known to inhabit dry, sandy, open ground of woods, shaded edges and roadsides within Ulster County, Towns of Ulster and Kingston on the USGS Kingston West Quadrangle. This species may occur within the project area.

The Prairie Wedgegrass (*Sphenopholis obtusata var obtusata*) is a rare plant species known to inhabit dry, open soils of woods and shaded edges, watersides and meadows within Ulster County, Town of New Paltz on the USGS Rosendale and Clintondale Quadrangle.

Interchange 20 (Saugerties) to Northern Project Limit - The segment from Interchange 20 to the northern project limit primarily contains emergent wetlands associated with ditches and stream channels. Secondary sources and field investigations also identified forested wetland. This segment also includes several streams including Tannery Brook, Sawyers Kill Creek and unnamed streams and ponds. The NYSFWM indicates the presence of two New York State regulated wetlands within this segment.

The NYSDEC Natural Heritage Program has identified three species of special concern known to inhabit the vicinity of the project area. The Purple Milkweed (*Asclepias purpurascens*) is a state threatened plant species known to inhabit well-drained, dry to moist ground of upland woods and shaded edges within Greene County and the Town of Catskill on the Cementon USGS Quadrangle. This species is likely to occur in the study area.

Two additional rare plant species which do not have a legal status, but which are being monitored by the NYSDEC are the Bush's Sedge (*Carex bushii*) and Small Skullcap (*Scutellaria parvula var parvula*). The Bush's Sedge is a rare plant species known to inhabit moist, open ground of thin woods, fields and meadows within Ulster and Greene Counties and the Towns of Catskill and Saugerties on the Cementon USGS Quadrangle. The Small Skullcap is another rare plant species known to inhabit sandy soils, usually in limestone areas within the Town of Saugerties of Greene County, located on the Cementon USGS Quadrangle.

The NYSDEC Natural Heritage Program has designated the Great Vly wetland system as a waterfowl concentration area. It is connected to the study area by Sawyer Kill Creek. The Great Vly is also known to contain habitat for Bush's Sedge and Small Skullcap.

7.1.2 Air and Noise Receptors

Clusters of residences are scattered throughout the study area, as shown on the alignment plans developed during Phase 4. The largest number of clusters are located between Interchanges 17 and 18, and the fewest number of clusters are located between Interchanges 18 and 19 and north of Interchange 20. The segment between Interchanges 18 and 19, however, contains the

largest cluster of residences adjacent to the east side of the Thruway, the Spring Lake Trailer Park.

7.1.3 Cultural Resources

Southern Project Limit (Newburgh) to Interchange 18 (New Paltz) - The constraints in this area are from potential archaeological remains of a historic farmstead and approximately seventeen areas of sensitivity for prehistoric archaeological remains. The presence of archaeological deposits should be determined where these locations will be potentially impacted by the proposed undertaking.

Interchange 18 (New Paltz) to Interchange 19 (Kingston) - The major constraint in this area is Perrine's Bridge, an 1844 covered bridge listed on the National Register of Historic Places. Located only 60 feet from the Thruway edge of pavement, this significant historic structure could be threatened by construction east of the Thruway, depending on the location and design of the maglev system.

There are three recorded archaeological sites in this segment of the project corridor, two of which are located adjacent to the Thruway, and thirteen areas of sensitivity for prehistoric archaeological remains. The presence of archaeological deposits should be determined where these locations will be potentially impacted by the proposed undertaking. Particularly sensitive locations are along Wallkill River, Rondout Creek, and Esopus Creek.

Interchange 19 (Kingston) to Interchange 20 (Saugerties) - There are three recorded prehistoric sites in this segment of the project corridor, one of which is located directly adjacent to the Thruway, and nine areas of sensitivity for prehistoric archaeological remains. The presence of archaeological deposits should be determined where these locations will be potentially impacted by the proposed undertaking. Particularly sensitive locations are along Esopus Creek, Saw Kill, and Plattekill Creek.

Interchange 20 (Saugerties) to Northern Project Limit - There are no recorded archaeological sites or historic properties in this section of the project area. However, there are seven areas of sensitivity for prehistoric archaeological remains. The presence of archaeological sites should be determined where sensitive locations will be potentially impacted by the proposed undertaking, particularly in the Sawyer Kill floodplain and areas near Great Vly Swamp.

7.1.4 Hazardous Waste

There are no state-listed sites of concern within the 50-mile study corridor and no physical indicia of hazardous waste contamination were observed during the windshield inspection. Certain businesses and operations are located in the study area, including gas stations and state owned maintenance and toll areas, that conduct or may conduct operations associated with petroleum and/or hazardous waste. This does not indicate a problem, only that the potential for an incident may be present. Such areas are identified on the alignment plans.

The State's database of spill incidents identified twenty-two active cases in the vicinity of the project area. These spills occurred between 1988 and 1994 throughout the project area. Information regarding the spills is limited. Pending further information from NYSDEC regarding

spill incidents and based on the findings of this screening study, no constraints related to hazardous materials were identified in any of the segments of the study corridor.

7.1.5 Overhead Utilities

Overhead utilities which cross the Thruway or parallel it within 500 feet of the edge of pavement were identified through a review of aerial photographs, USGS quadrangle maps, and the topographic maps prepared during Phase 4. These lines are indicated on the alignment plans. There are ten crossings within the study corridor.

7.2 Design Criteria

The conceptual maglev alignment was designed using generic criteria developed in conjunction with NYSTA, NYSDOT and Raytheon. (Raytheon prepared the Massachusetts/New York High Speed Surface Transportation Study for NYSDOT). In several cases, BLA and Raytheon agreed to use different criteria pending future studies by others. There criteria are noted below. The basic parameters used for design are:

- Maximum roll rate of 6 degrees/second.
- Maximum system banking of 24 degrees (Max. 12° cant and Max. 12° tilt).
- Maximum lateral jerk rate of 0.15 g/sec.
- Maximum unbalanced lateral acceleration of 0.1 g.
- Maximum vertical acceleration of 0.1 g for sag curves. (Raytheon used a 0.2 g maximum vertical acceleration for sag curves. Future technical studies by others will determine which is more appropriate for maglevs.)
- Maximum vertical acceleration of 0.05 g for crest curves. (Raytheon will maintain use of a 0.1g maximum vertical acceleration for crest curves. Future technical studies by others will determine which is more appropriate for maglevs.)

Required spiral lengths were computed based on the following triple criteria:

- maximum roll rate of 6 degrees/second with sinusoidal transitions and unbalanced lateral acceleration of 0.1 g
- maximum jerk of 4.83 feet/second^3 and unbalanced lateral acceleration of 0.1 g
- maximum equipment twist of 0.024 degrees/foot with 12 degree maximum guideway superelevation and 12 degree maximum vehicle tilt

Spiral reductions were estimated for back-to-back reverse spirals with no tangent between them.

7.3 Horizontal Alignment

200 scale AutoCAD planimetric and topographic base maps (5 ft. contours and spot elevations) were utilized. The AutoCAD files were obtained from NYSTA. ROW information along the easterly side of the Thruway was retrieved, updated and plotted by hand from the ROW plans supplied by NYSTA. The ROW data was then transferred from plans to the AutoCAD files by the "station-and-offset" method.

The maglev guideway centerline was conceptualized utilizing AdCADD/AutoCAD and COGO software capable of processing circular curves and sinusoidal spiral transitions. The minimum spiral lengths as a function of curve radii and reduced back-to-back spiral lengths were used as a guide to select appropriate combinations of curves and spirals. Care was taken to stay within a range of adjacent radii and spirals to improve speed profile characteristics and minimize energy consumption.

Several "trial-and-error" sets of guideway curves/spirals were evaluated for every Thruway curve in order to avoid or minimize property takings. In most cases, the maglev guideway's horizontal alignment parallels that of the Thruway, and the guideway's centerline is located within the Thruway's available right-of-way. However, in some areas the Thruway's curves are too sharp, "broken back" or too closely spaced, to accommodate the maglev guideway's minimum spirals at an acceptable speed. Consequently, in several locations, three consecutive Thruway curves were encompassed by two maglev curves. This deviation required ROW acquisition.

The guideway's horizontal alignment extends ±50 miles from the vicinity of Thruway milepost 58 to approximately milepost 108. Spiral lengths vary from ±1250 feet to ±2400 feet while the minimum radius curve is ±4100 feet. The first twenty-five mile long section contains thirty-one curves and requires ±1 acre of ROW acquisition. The second twenty-five mile long section contains twenty-four horizontal curves and requires ±24 acres of ROW acquisition to maintain speeds over 185 mph.

7.4 Vertical Alignment

Minimum vertical clearances were evaluated under the assumption that the depth of maglev guideway structure would be 6.0 ft. and the typical pier cap depth would be 4.0 ft. (See Figure 7.1). The following guidelines for profile design were adopted:

- Where the guideway centerline was located more than 32 ft. from the edge of Thruway pavement (EOP), the maglev profile was generally 15 ft. - 30 ft. above the ground.

- Where the guideway centerline was located less than 32 ft. from the Thruway EOP, the maglev profile was designed a minimum of 26.25 ft. above the elevation of the Thruway's shoulder.

- Where the guideway alignment crosses a Thruway overpass, the maglev profile was designed a minimum of 22.0 ft above the local cross-road.

- Where the guideway profile was designed under a Thruway overpass, a minimum vertical clearance of 13.0 ft was provided for the guideway.

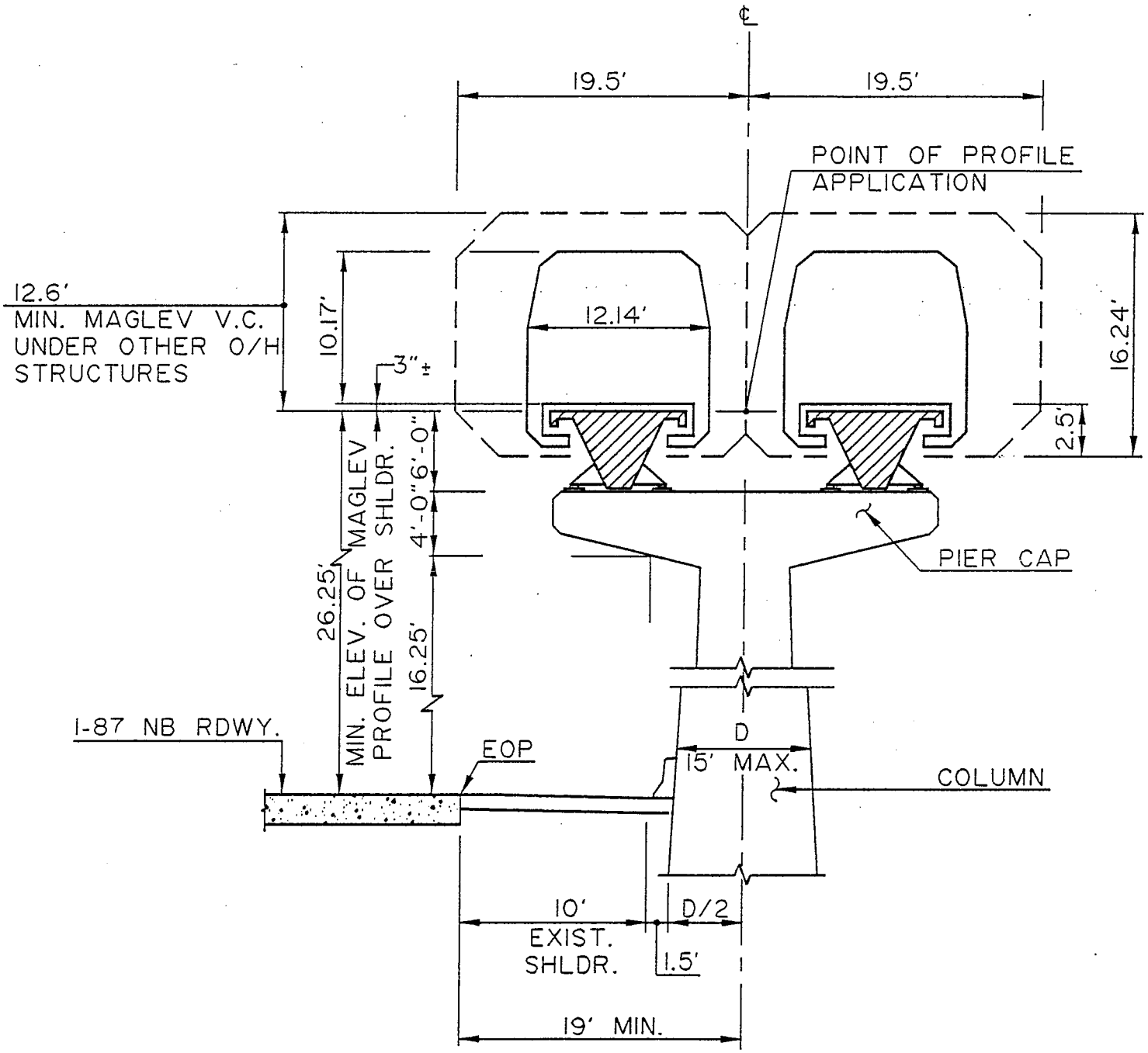

TYPICAL GUIDEWAY CROSS SECTION

FIGURE 7.1

Transrapid recommends the use of circular curves flanked by vertical clothoid spiral transitions for the maglev guideway's profile. The four National Maglev Institute systems do not recommend specific guideway profile design criteria. In order to simplify the conceptual design, simple circular curves were used. The final alignment incorporating spiral transitions should not change significantly over this simplified alignment.

All vertical curves were designed to exceed minimum standards to eliminate possible problems with superimposition of unbalanced centrifugal forces caused by combination of horizontal and vertical alignments. For aesthetic and economic reasons the proposed maglev profile was designed to avoid high piers or deep rock cuts.

The guideway's profile has a maximum grade of ±3.5% and a minimum vertical curve length of ±600 feet. Its maximum vertical curve length is ±4000 feet, maximum elevation over ground is ±55 feet, and maximum depth of cut is ±50 feet.

The profile elevations range from 86.30 at Station 1347+34 to 685.34 at Station 590+35. Guideway segments located in cut sections would require special treatments (e.g., fencing, sensors) to prevent foreign debris from landing or being placed on the guideway. The transition to the cut sections must be designed to accommodate high speed operations and associated pressure waves. These issues will be addressed in preliminary and final design.

7.5 Coordination of Plan and Profile

Coordination of the guideway's vertical and horizontal alignment was essential for safety and passenger comfort. For example, superimposition of a horizontal curve with 0.1 g lateral acceleration and a vertical curve with 0.1 g vertical acceleration would produce unacceptable resultant acceleration of 0.14 g. Staggered or overlapped horizontal and vertical curves could result in a distribution of unbalanced resultant centrifugal forces which cause rider discomfort.

In the absence of specific coordination criteria, the following guidelines were adopted:

- the points of vertical intersection (PVI) were located near the middle of horizontal curves
- In most cases, no more than one vertical curve was located within a single horizontal curve and most vertical curves do not extend beyond spiral to tangent (ST) or tangent to spiral (TS) points.
- Vertical curves located on horizontal tangent were designed not to exceed the tangent length.

7.6 ROW Acquisitions

The acquisition of additional right-of-way (ROW) and air rights is proposed at several locations in order to accommodate required sinusoidal spiral transitions and maintain acceptable maglev speeds. Specifically, ±25 acres of land is proposed for acquisition over the 50 mile guideway alignment. This property is spread over seven parcels, the largest of which is ±15 acres in size. Acquisition of ±1.5 miles of air rights is also proposed, spread over eight parcels.

The proposed acquisition of 15.3 acres of property between Station 1448+50 and Station 1486+00, in the vicinity of milepost 87, accounts for ±60 percent of the proposed property takings. With this acquisition, maglev speeds of ±200 miles per hour are projected for this section of guideway. Without the acquisition, maglev speeds would be limited to ±150 miles per hour. It is noted that a section of railroad ROW which parallels the Thruway in this area could potentially be used for the guideway. This option should be investigated in preliminary design.

8.0 MAGLEV SUPPORT FACILITY

8.1 Location/Design Criteria

The maglev support facility would include administrative offices, component workshops, computer and control facilities, electric power transmission equipment and transformers, a maintenance shop and storage area. An observation area is also recommended since the maglev has the potential to become a tourist attraction. The support facility should be located adjacent to the guideway, on a site with good roadway access and in the vicinity of existing power lines of appropriate capacity to reduce cost of power supply. It should also be located on a tangent section of the guideway or flat portion of spiral to facilitate functioning of switches and sidings. The guideway should be no higher than fifteen feet above the original ground at the support facility site to provide easy access from mainline to sidings. It is estimated that a five acre site is required based on Transrapid's existing facility at Emsland and maglev lines proposed in other cities.

8.2 Alternative Locations

Seven parcels, each at least five acres in size, were identified for the potential development of maglev support facilities. These parcels were selected based on their size, location, topography, roadway access and proximity to existing power lines. With the exception of Parcel 6, all of the parcels require the acquisition of additional right-of-way. The parcels are described below:

- Parcels 1 and 2 are located in the vicinity of Thruway exit 17. They have good access characteristics but are located near residential areas. Their location near the end of the corridor may provide operational advantages.

- Parcels 3 and 4 are located in the vicinity of Thruway exit 18. These locations have good access characteristics and are near power lines.

- Parcel 5 is located in the vicinity of Thruway exit 19. The Thruway ROW is wide in this area, significantly reducing the amount of additional ROW required. Power lines are available in the vicinity of the site. However, the existing local access road would require improvement.

- Parcel 6 is located in the vicinity of Thruway exit 20. It is currently used as a Thruway rest area and thus has direct access from the northbound Thruway. It offers good road access and proximity to power lines. The site is also near an existing freight line. Conversion of the site from a rest area to a maglev support facility could preclude the acquisition of additional property. This may be feasible since a Thruway service area is located within four miles of this site.

- Parcel 7 is located between Thruway exits 20 and 21. Access to the site is relatively poor, however, the support facility's location at the end of the test site may provide operational advantages.

9.0 CONCLUSIONS

Under the project's original Scope of Services, the refined conceptual maglev guideway alignment prepared during the fourth phase of the project was to be used for the preparation of refined estimates of construction costs, vehicle speeds and power requirements/energy use. A more detailed environmental review was also to be conducted including a discussion of maglev system/site-specific issues and a discussion of the potential "startle effect" based on previous studies.

However, as a result of policy changes at the State and Federal levels, it was determined that the current study should be terminated prior to the completion of these tasks. The cost estimates presented in this report are therefore based on the guideway alignment sketches and data collected during the first three phases of this study. The speed estimates for the refined alignment were developed based on a manual review of the alignment geometry without use of Transrapid's simulation model.

Even with these limitations, it is clear that a maglev guideway and support facility could be constructed adjacent to the New York State Thruway between Newburgh and Saugerties with minimal environmental impact. With a limited program of ROW acquisition (± 25 acres), average speeds between 185 mph and 225 mph are projected for this 50 mile long corridor. Speeds up to 300 mph appear to be attainable over significant distances with the acquisition of additional ROW.

B\MAGLEV19.95